C.I.P.	7 Penna Country of Origin: IT	TAB. IV Date 04-05-18 Revision 04-09-27

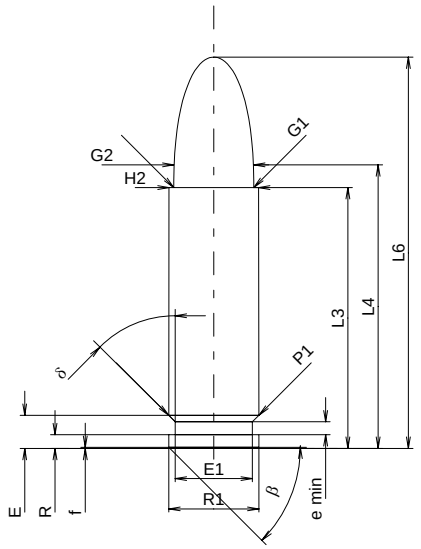

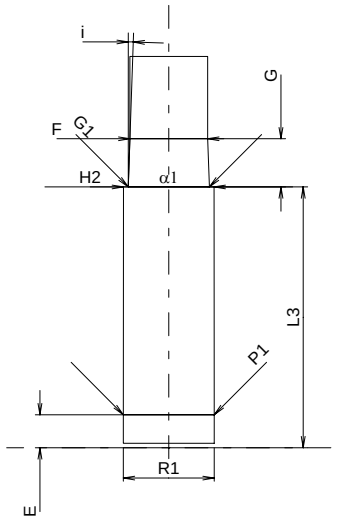

Scale 1.5:1

CARTRIDGE MAXI

Lengths

L1	=		
L2	=		
L3 1)	=	23.00	-0.25
L4	=	25.00	
L5	=		
L6	=	34.50	

Case Head

R	=	1.20
R1	=	7.95
R3	=	
E	=	2.92
E1	=	6.80
e min	=	1.15
δ	=	45°
f	=	0.10
β	=	45°

Powder Chamber

P1	=	7.95
P2	=	

Junction Cone

α	=	
S	=	
r1 min	=	
r2	=	

Collar

H1	=	
H2 1)	=	7.90

Projectile

G1 1)	=	7.04
G2	=	7.04
F	=	
L3+G 1)	=	27.25

Pressures (Energies)
Method Transducer

Pmax	=	2500	bar
PK	=	2875	bar
PE	=	3250	bar
M	=	12.50	

Miscellaneous Dimensions

Fe	=	0.30
delta L	=	

CHAMBER MINI

Lengths

L1	=	
L2	=	
L3 1)	=	23.00

Breech

R	=	
R1	=	8.00
R2	=	
R3	=	
r	=	

Powder Chamber

E	=	2.92
P1 1)	=	8.00
P2	=	

Junction Cone

α	=	
S	=	
r1 max	=	
r2	=	

Collar

H1	=	
H2 1)	=	7.98

Commencement of Rifling

G1 1)*	=	7.15
G 1)*	=	4.25
α1	=	180°
h	=	
s	=	
i 1)	=	1°57'15"
w	=	

Barrel

F 1)*	=	6.86
Z 1)	=	7.03

Grooves

b	=	0.85	
N	=	6	
u	=	254.00	
Q	=	37.40	mm²

Dimensions in << mm >>
Dimensions and Tolerances for Proof Barrels
see Appendix CR 1.

Notes: 1) Check for safety reasons
* Basic dimensions